Cambridge International AS & A Level

Cambridge Assessment International Education
Cambridge International Advanced Subsidiary and Advanced Level

CANDIDATE NAME

CENTRE NUMBER

CANDIDATE NUMBER

0658634143

PHYSICS **9702/22**

Paper 2 AS Level Structured Questions **May/June 2019**

1 hour 15 minutes

Candidates answer on the Question Paper.

No Additional Materials are required.

READ THESE INSTRUCTIONS FIRST

Write your centre number, candidate number and name on all the work you hand in.
Write in dark blue or black pen.
You may use an HB pencil for any diagrams or graphs.
Do not use staples, paper clips, glue or correction fluid.
DO **NOT** WRITE IN ANY BARCODES.

Answer **all** questions.

Electronic calculators may be used.
You may lose marks if you do not show your working or if you do not use appropriate units.

At the end of the examination, fasten all your work securely together.
The number of marks is given in brackets [ ] at the end of each question or part question.

This document consists of **14** printed pages and **2** blank pages.

© UCLES 2019

Cambridge Assessment International Education

Data

speed of light in free space	$c = 3.00 \times 10^{8}\,\text{m s}^{-1}$
permeability of free space	$\mu_0 = 4\pi \times 10^{-7}\,\text{H m}^{-1}$
permittivity of free space	$\varepsilon_0 = 8.85 \times 10^{-12}\,\text{F m}^{-1}$
	$(\frac{1}{4\pi\varepsilon_0} = 8.99 \times 10^{9}\,\text{m F}^{-1})$
elementary charge	$e = 1.60 \times 10^{-19}\,\text{C}$
the Planck constant	$h = 6.63 \times 10^{-34}\,\text{J s}$
unified atomic mass unit	$1\,\text{u} = 1.66 \times 10^{-27}\,\text{kg}$
rest mass of electron	$m_e = 9.11 \times 10^{-31}\,\text{kg}$
rest mass of proton	$m_p = 1.67 \times 10^{-27}\,\text{kg}$
molar gas constant	$R = 8.31\,\text{J K}^{-1}\,\text{mol}^{-1}$
the Avogadro constant	$N_A = 6.02 \times 10^{23}\,\text{mol}^{-1}$
the Boltzmann constant	$k = 1.38 \times 10^{-23}\,\text{J K}^{-1}$
gravitational constant	$G = 6.67 \times 10^{-11}\,\text{N m}^2\,\text{kg}^{-2}$
acceleration of free fall	$g = 9.81\,\text{m s}^{-2}$

© UCLES 2019

Formulae

uniformly accelerated motion	$s = ut + \frac{1}{2}at^2$ $v^2 = u^2 + 2as$
work done on/by a gas	$W = p\Delta V$
gravitational potential	$\phi = -\frac{Gm}{r}$
hydrostatic pressure	$p = \rho gh$
pressure of an ideal gas	$p = \frac{1}{3}\frac{Nm}{V}\langle c^2 \rangle$
simple harmonic motion	$a = -\omega^2 x$
velocity of particle in s.h.m.	$v = v_0 \cos \omega t$ $v = \pm \omega \sqrt{(x_0^2 - x^2)}$
Doppler effect	$f_o = \frac{f_s v}{v \pm v_s}$
electric potential	$V = \frac{Q}{4\pi\varepsilon_0 r}$
capacitors in series	$1/C = 1/C_1 + 1/C_2 + \ldots$
capacitors in parallel	$C = C_1 + C_2 + \ldots$
energy of charged capacitor	$W = \frac{1}{2}QV$
electric current	$I = Anvq$
resistors in series	$R = R_1 + R_2 + \ldots$
resistors in parallel	$1/R = 1/R_1 + 1/R_2 + \ldots$
Hall voltage	$V_H = \frac{BI}{ntq}$
alternating current/voltage	$x = x_0 \sin \omega t$
radioactive decay	$x = x_0 \exp(-\lambda t)$
decay constant	$\lambda = \frac{0.693}{t_{\frac{1}{2}}}$

© UCLES 2019

[Turn over

BLANK PAGE

© UCLES 2019

Answer **all** the questions in the spaces provided.

1 **(a)** The diameter d of a cylinder is measured as 0.0125 m ± 1.6%.

Calculate the absolute uncertainty in this measurement.

absolute uncertainty = ... m [1]

(b) The cylinder in **(a)** stands on a horizontal surface. The pressure p exerted on the surface by the cylinder is given by

$$p = \frac{4W}{\pi d^2}.$$

The measured weight W of the cylinder is 0.38 N ± 2.8%.

(i) Calculate the pressure p.

p = ... $\mathrm{N\,m^{-2}}$ [1]

(ii) Determine the absolute uncertainty in the value of p.

absolute uncertainty = ... $\mathrm{N\,m^{-2}}$ [2]

[Total: 4]

© UCLES 2019

[Turn over

2 **(a)** State Newton's second law of motion.

.....

.....[1]

(b) A car of mass 850 kg tows a trailer in a straight line along a horizontal road, as shown in Fig. 2.1.

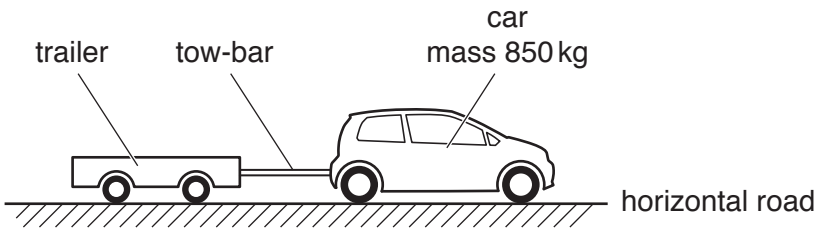

Fig. 2.1

The car and the trailer are connected by a horizontal tow-bar.

The variation with time t of the velocity v of the car for a part of its journey is shown in Fig. 2.2.

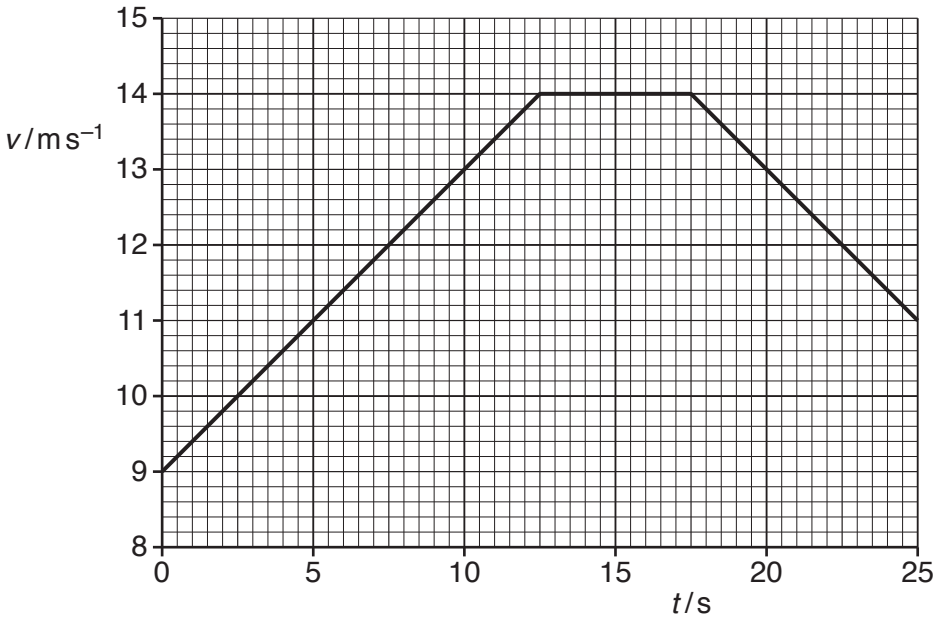

Fig. 2.2

(i) Calculate the distance travelled by the car from time $t = 0$ to $t = 10\,s$.

distance = ... m [2]

(ii) At time $t = 10\,s$, the resistive force acting on the car due to air resistance and friction is 510 N. The tension in the tow-bar is 440 N.

For the car at time $t = 10\,s$:

1. use Fig. 2.2 to calculate the acceleration

acceleration = ... $m\,s^{-2}$ [2]

2. use your answer to calculate the resultant force acting on the car

resultant force = ... N [1]

3. show that a horizontal force of 1300 N is exerted on the car by its engine

[1]

4. determine the useful output power of the engine.

output power = ... W [2]

© UCLES 2019

[Turn over

(c) A short time later, the car in **(b)** is travelling at a constant speed and the tension in the tow-bar is 480 N.

The tow-bar is a solid metal rod that obeys Hooke's law. Some data for the tow-bar are listed below.

Young modulus of metal = 2.2×10^{11} Pa

original length of tow-bar = 0.48 m

cross-sectional area of tow-bar = 3.0×10^{-4} m^2

Determine the extension of the tow-bar.

extension = ... m [3]

(d) The driver of the car in **(b)** sees a pedestrian standing directly ahead in the distance. The driver operates the horn of the car from time $t = 15$ s to $t = 17$ s. The frequency of the sound heard by the pedestrian is 480 Hz. The speed of the sound in the air is 340 m s^{-1}.

Use Fig. 2.2 to calculate the frequency of the sound emitted by the horn.

frequency = ... Hz [2]

[Total: 14]

© UCLES 2019

BLANK PAGE

© UCLES 2019

[Turn over

3 **(a)** State what is meant by the *centre of gravity* of a body.

.....

.....[1]

(b) A uniform square sign with sides of length 0.68 m is fixed at its corner points A and B to a wall. The sign is also supported by a wire CD, as shown in Fig. 3.1.

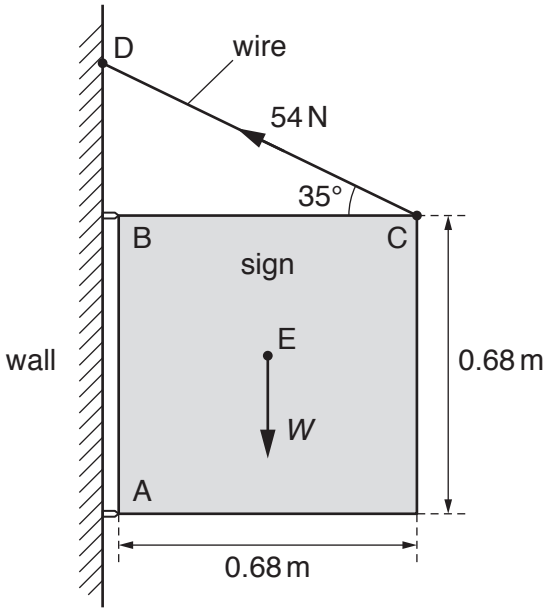

Fig. 3.1 (not to scale)

The sign has weight *W* and centre of gravity at point E. The sign is held in a vertical plane with side BC horizontal. The wire is at an angle of 35° to side BC. The tension in the wire is 54 N.

The force exerted on the sign at B is only in the vertical direction.

(i) Calculate the vertical component of the tension in the wire.

vertical component of tension = ... N [1]

(ii) Explain why the force on the sign at B does not have a moment about point A.

.....

.....[1]

© UCLES 2019

(iii) By taking moments about point A, show that the weight W of the sign is 150 N.

[2]

(iv) Calculate the total vertical force exerted by the wall on the sign at points A and B.

total vertical force = ... N [1]

(c) The sign in **(b)** is held together by nuts and bolts. One of the nuts falls vertically from rest through a distance of 4.8 m to the pavement below. The nut lands on the pavement with a speed of $9.2\,m\,s^{-1}$.

Determine, for the nut falling from the sign to the pavement, the ratio

$$\frac{\text{change in gravitational potential energy}}{\text{final kinetic energy}}.$$

ratio = ... [4]

[Total: 10]

4 **(a)** For a progressive water wave, state what is meant by:

(i) *displacement*

.....

.....[1]

(ii) *amplitude*.

.....

.....[1]

(b) Two coherent waves X and Y meet at a point and superpose. The phase difference between the waves at the point is 180°. Wave X has an amplitude of 1.2 cm and intensity I. Wave Y has an amplitude of 3.6 cm.

Calculate, in terms of I, the resultant intensity at the meeting point.

intensity = ... [2]

(c) **(i)** Monochromatic light is incident on a diffraction grating. Describe the diffraction of the light waves as they pass through the grating.

.....

.....

.....[2]

© UCLES 2019

(ii) A parallel beam of light consists of two wavelengths 540 nm and 630 nm. The light is incident normally on a diffraction grating. Third-order diffraction maxima are produced for each of the two wavelengths. No higher orders are produced for either wavelength.

Determine the smallest possible line spacing d of the diffraction grating.

d = ... m [3]

(iii) The beam of light in **(c)(ii)** is replaced by a beam of blue light incident on the same diffraction grating.

State and explain whether a third-order diffraction maximum is produced for this blue light.

.....

.....

.....[2]

[Total: 11]

5 **(a)** State Kirchhoff's second law.

.....

.....[2]

(b) A battery of electromotive force (e.m.f.) 5.6 V and internal resistance r is connected to two external resistors, as shown in Fig. 5.1.

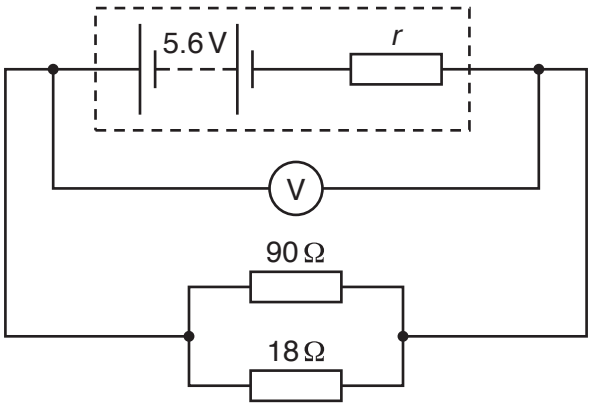

Fig. 5.1

The reading on the voltmeter is 4.8 V.

(i) Calculate:

1. the combined resistance of the two resistors connected in parallel

combined resistance = ... Ω [2]

2. the current in the battery.

current = ... A [2]

(ii) Show that the internal resistance r is 2.5 Ω.

[2]

© UCLES 2019

(iii) Determine the ratio

$$\frac{\text{power dissipated by internal resistance } r}{\text{total power produced by battery}}.$$

ratio = ... [3]

(c) The battery in **(b)** is now connected to a battery of e.m.f. 7.2 V and internal resistance 3.5 Ω. The new circuit is shown in Fig. 5.2.

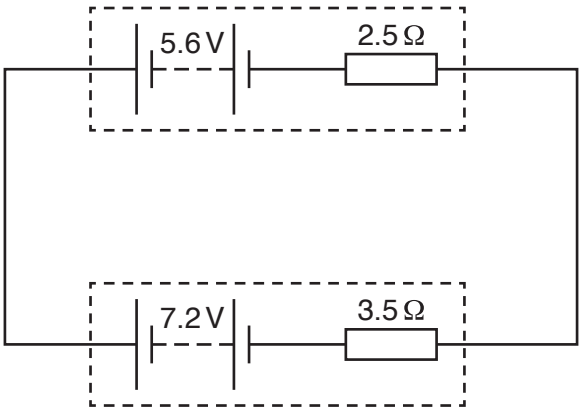

Fig. 5.2

Determine the current in the circuit.

current = ... A [2]

[Total: 13]

6 **(a)** State what is meant by a *field line* (*line of force*) in an electric field.

.....

.....[1]

(b) An electric field has two different regions X and Y. The field strength in X is less than that in Y. Describe a difference between the pattern of field lines (lines of force) in X and in Y.

.....

.....[1]

(c) A particle P has a mass of 0.15 u and a charge of $-1e$, where e is the elementary charge.

(i) Particle P and an α-particle are in the same uniform electric field. Calculate the ratio

$$\frac{\text{magnitude of acceleration of particle P}}{\text{magnitude of acceleration of } \alpha\text{-particle}}.$$

ratio = ... [3]

(ii) Particle P is a hadron composed of only two quarks. One of them is a down (d) quark.

By considering charge, determine a possible type (flavour) of the other quark. Explain your working.

.....

.....[3]

[Total: 8]

Permission to reproduce items where third-party owned material protected by copyright is included has been sought and cleared where possible. Every reasonable effort has been made by the publisher (UCLES) to trace copyright holders, but if any items requiring clearance have unwittingly been included, the publisher will be pleased to make amends at the earliest possible opportunity.

To avoid the issue of disclosure of answer-related information to candidates, all copyright acknowledgements are reproduced online in the Cambridge Assessment International Education Copyright Acknowledgements Booklet. This is produced for each series of examinations and is freely available to download at www.cambridgeinternational.org after the live examination series.

Cambridge Assessment International Education is part of the Cambridge Assessment Group. Cambridge Assessment is the brand name of the University of Cambridge Local Examinations Syndicate (UCLES), which itself is a department of the University of Cambridge.

© UCLES 2019